CREATIVE SPACES
AT COTTONS HOTEL & SPA

MAKE YOUR MEETINGS STAND OUT

CREATIVE SPACES
TO MAKE YOUR MEETING STAND OUT

ADAPTIVE MEETING SPACES
To get the best from your meeting, you may prefer a different approach. Our adaptive spaces can be tailored to suit the objective of your meeting with different layouts.

FLEXIBLE SEATING AND TABLES
Furniture designed to facilitate brainstorming in an interactive, collaborative way. Multiple seating options to choose from based upon the size and type of meeting you are holding.

BREAK OUT SPACES
We have areas around the hotel that can be used if you need to break out into small working groups or to get energy levels back up.

SERVICES/FACILITIES
- Audio Visual equipment on request
- Dedicated event managers on hand to support your meetings
- Air conditioned rooms
- Business Centre available for admin support
- Superfast WiFi throughout all guest rooms and meeting rooms

CONFERENCE CAFE

LUNCHTIME MENUS CHANGE DAILY AND THE EXTENSIVE SELECTION OF HOT AND COLD DISHES MEANS THERE'S ALWAYS SOMETHING TO TEMPT EVERY APPETITE

The menu includes a balanced offering including some brain - boosting foods to keep you as sharp and focussed as possible - plus some naughty but nice favourites if you're having a treat.

The grazing options change throughout the day from nutritious mid-morning smoothies and home baked cookies, to retro sweets.

In addition we have free flowing teas coffees and other hot drink options so that you can stop whenever suits your meeting and refresh for the next stage.

ACCOMMODATION

SIGNATURE GUEST ROOMS

A good nights sleep can lead to an even more productive meeting. When you stay with us you can expect:

- Complimentary Superfast WiFi throughout our guest rooms
- Work desks with lighting and power
- Great quality beds, with comfy mattress toppers for a good nights sleep
- A full breakfast
- Access to our spa leisure facilities and pool
- Free parking
- Fluffy bathrobes
- Luxurious toiletries
- Fresh milk and a variety of tea options
- Filtered mineral water in the fridge

Standard rooms available with the option to upgrade to a Signature room or Junior Suite. Please ask for details.

HEALTH AND FITNESS

COMPLIMENTARY SPA MEMBERSHIP EACH TIME YOU STAY

Make time to relax and recharge your batteries - it's not all work and no play here. Whether you're with us for a fleeting one-night stay or a little longer, you'll be a member of our exclusive Spa as soon as you check in.

- Spa with 13 M. pool, hot tub and relaxation area
- Colour therapy sauna and fibre optic steam room
- 7 Spa treatment rooms and relaxation lounge
- Caudalie Spa Treatments and products
- Extensive gym with state of the art cardio vascular and resistance equipment
- Activity studio with daily classes - free to residents

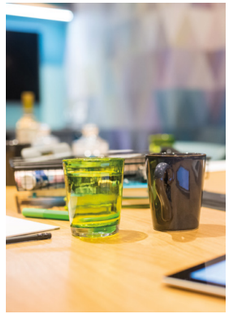

COTTONS HOTEL & SPA

FUNCTION SPACE

VERANDAH SUITE

Area	258 sqm 2,788 sqft
Dimensions	20.7m x 12.5m 68ft x 41ft
Banquet	180 people
Reception	200 people
Theatre	200 people
Cabaret	120 people
U - shape	30 people
Wedding	180 people

VERANDAH SUITE 1

Dimensions	11.6m x 12.5m 38ft x 41ft
Banquet	80 people
Reception	100 people
Theatre	120 people
Cabaret	60 people
Boardroom	30 people
U - shape	30 people
Wedding	80 people

VERANDAH SUITE 2

Dimensions	10.9m x 9.1m 35.7ft x 29.8ft
Banquet	60 people
Reception	100 people
Theatre	100 people
Cabaret	50 people
Boardroom	30 people
U - shape	30 people
Wedding	80 people

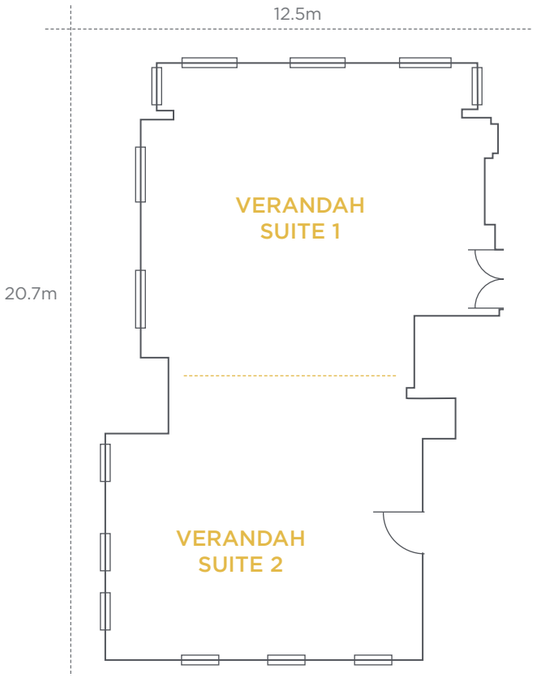

COTTONS HOTEL & SPA
FUNCTION SPACE

CHESHIRE SUITE

Area	101sqm 1080sqft
Dimensions	11.5m x 8.8m 40ft x 27ft
Theatre	80 people
Cabaret	50 people
Boardroom	30 people
U - shape	30 people

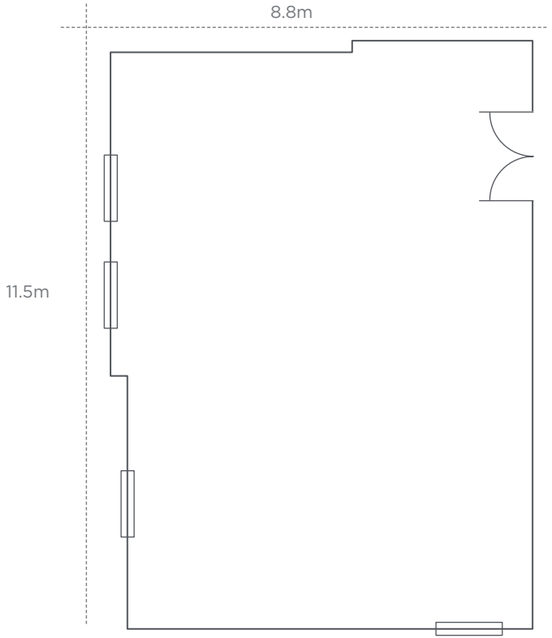

COTTONS HOTEL & SPA
FUNCTION SPACE

GAWSWORTH

Area	49.5sqm 528sqft
Dimensions	9m x 5.5m 30ft x 17.6ft
Theatre	24 people
Cabaret	20 people
Boardroom	16 people
U - shape	18 people

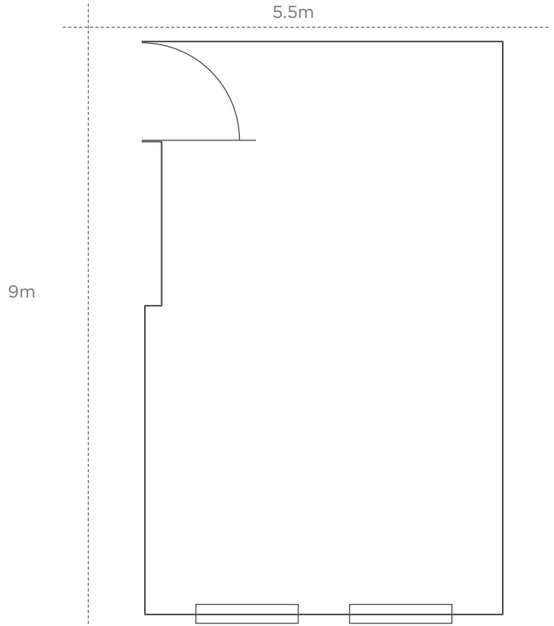

COTTONS HOTEL & SPA
FUNCTION SPACE

CRANFORD

Area	44.4sqm 500sqft
Dimensions	7.4m x 6.0m 25ft x 20ft
Theatre	28 people
Cabaret	18 people
Boardroom	16 people
U - shape	18 people

PLUMLEY ROOM

Area	44.4sqm 500sqft
Dimensions	7.4m x 6m 25ft x 20ft
Theatre	28 people
Cabaret	18 people
Boardroom	16 people
U - shape	18 people

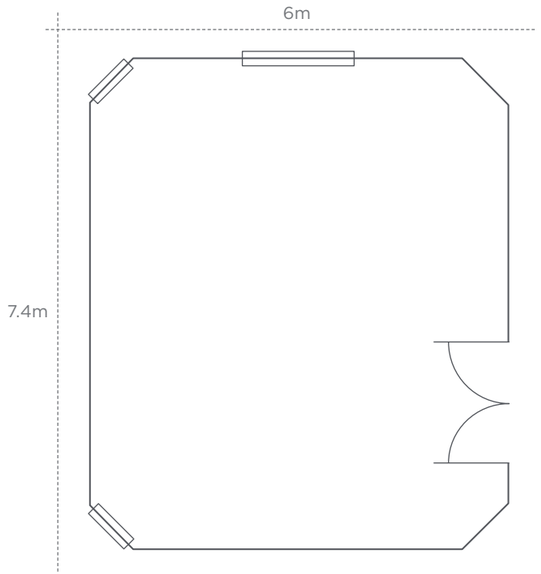

COTTONS HOTEL & SPA
FUNCTION SPACE

CAPESTHORNE

Area	33.8sqm 368sqft
Dimensions	7.5m x 4.6m 32ft x 15ft
Theatre	28 people
Boardroom	14 people

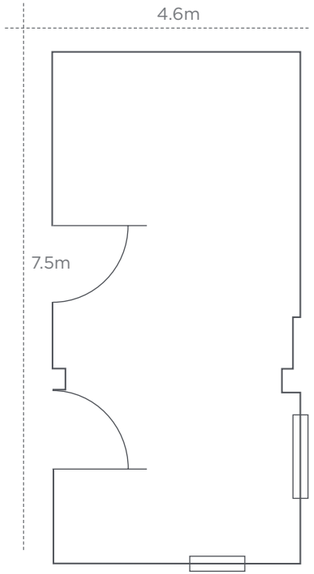

SYNDICATE ROOMS X2

Area	38sqm 425sqft
Dimensions	7.6m x 5m 25ft x 17ft
Boardroom	8 people

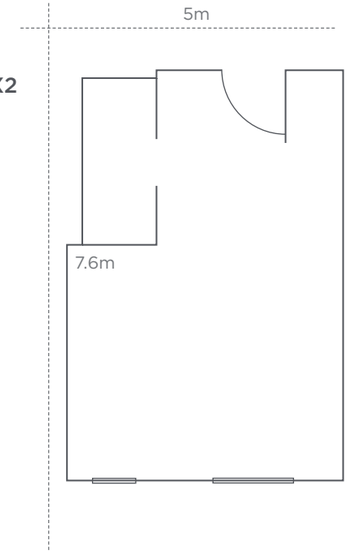

COTTONS HOTEL & SPA
FUNCTION SPACE

ARLEY

Area	31.2sqm 330sqft
Dimensions	6.5m x 4.8m 22ft x 15ft
Cabaret	12 people
Boardroom	12 people
Theatre	20 people
U-shape	12 people

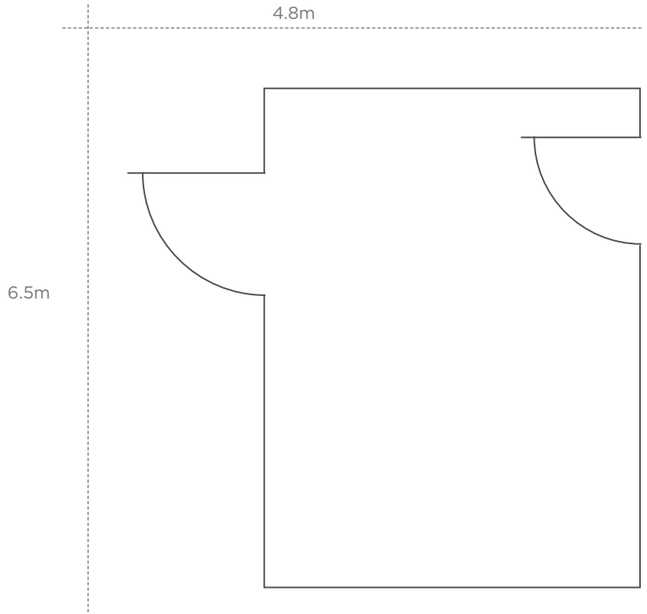

COTTONS HOTEL & SPA
FUNCTION SPACE

OAKMERE

Area	23.4sqm 264sqft
Dimensions	6.5m x 3.6m 22ft x 12ft
Boardroom	8 people

DELAMERE

Area	23.4sqm 264sqft
Dimensions	6.5m x 3.6m 22ft x 12ft
Boardroom	8 people

PICKMERE

Area	23.4sqm 264sqft
Dimensions	6.5m x 3.6m 22ft x 12ft
Boardroom	8 people

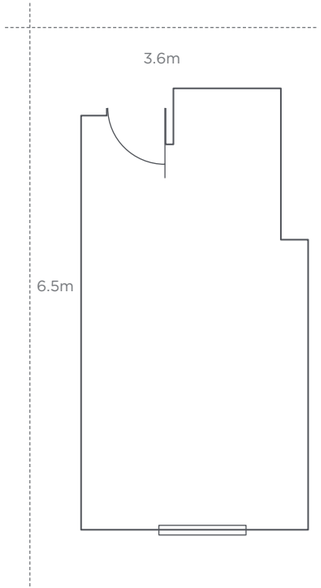

COTTONS HOTEL & SPA
LOCATION & TRAVELLING

LOCATION
Five minutes from the M6, J19/20, two miles from M56, J7 and 10 minutes from Manchester airport.

TRAVELLING DISTANCES

BY ROAD

Knutsford	1 mile
Cranage	8 miles
Warrington	10 miles
Macclesfield	11 miles
Manchester	18 miles
Runcorn	18 miles
Crewe	21 miles
Liverpool	30 miles
Preston	41 miles

BY RAIL

Nearest stations

Knutsford	1.8 miles
Warrington Bank Quay	10 miles

TRAVELLING TIMES

Birmingham	1hr 20min
London	1hr 55min
Glasgow	2hr 50min

BY AIR

Manchester Airport	8 miles

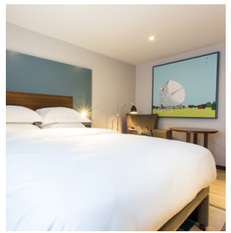

FOR MORE INFORMATION OR TO BOOK A MEETING, CLICK BELOW OR CONTACT US HERE:

Cottons Hotel & Spa
Manchester Road, Knutsford, Cheshire WA16 0SU

tel: 01565 650333

email: conference@cottonshotel.co.uk

Book Now

OTHER PROPERTIES
WITH MEETING SPACE

Click below on the required hotel name to be re-directed to their website.

Thorpe Park Hotel & Spa Leeds

Aztec Hotel & Spa Bristol

Kettering Park Hotel & Spa Northamptonshire

Solent Hotel & Spa Fareham

North Lakes Hotel & Spa Cumbria

Langdale Chase Windermere

Middletons York

Toll House Inn Lancaster

Millstone Mellor

The Fleece Cirencester

The Beverley Arms Beverley

Cottons Hotel & Spa
Manchester Road, Knutsford, Cheshire WA16 0SU

tel: 01565 650333
email: conference@cottonshotel.co.uk